45060–002

AutoCAD DRAWING DO NOT SCALE IF IN DOUBT – ASK

REV	DESCRIPTION	DRN	DATE

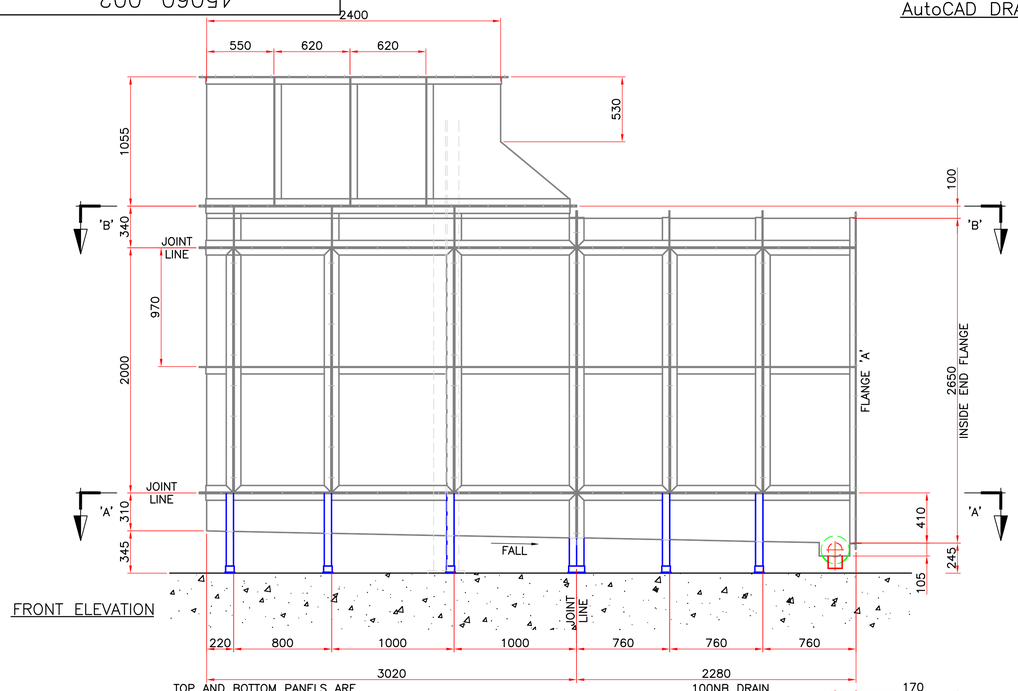

FRONT ELEVATION

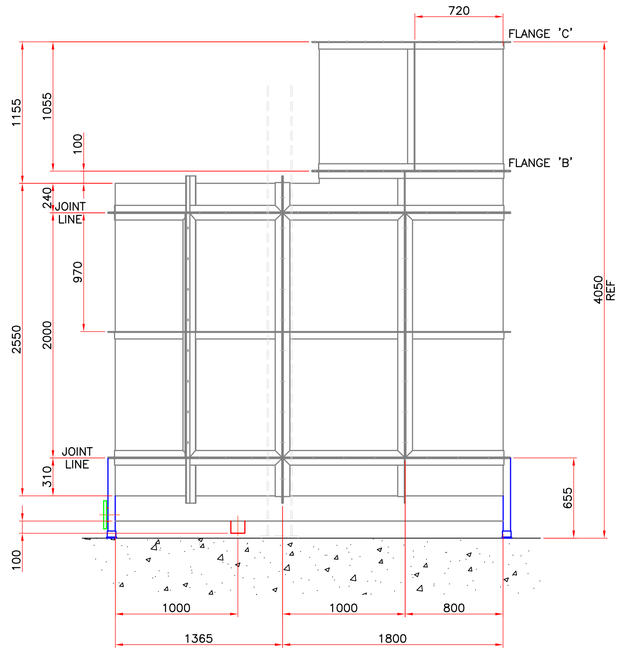

END ELEVATION

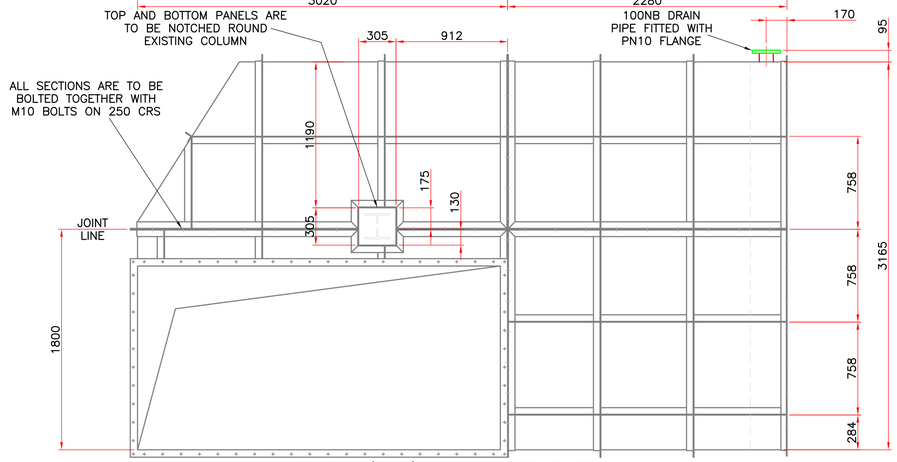

SECTION 'B–B' SHOWING TOP PANELS

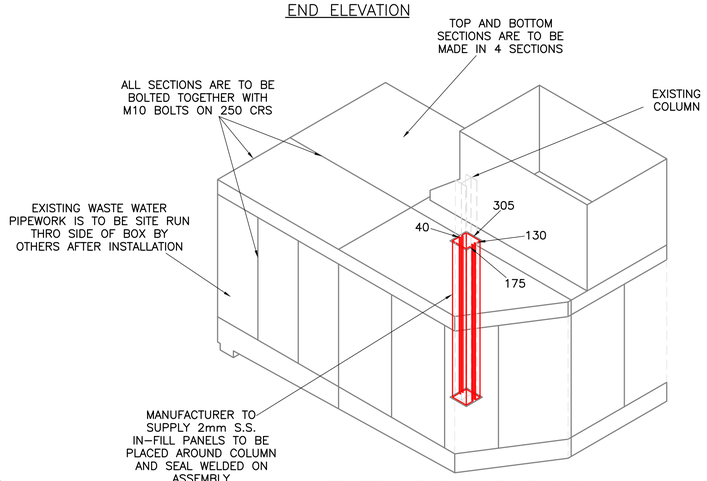

ISOMETRIC SHOWING BUILD AND IN–FILL PANEL AROUND COLUMN
SCALE 1:50

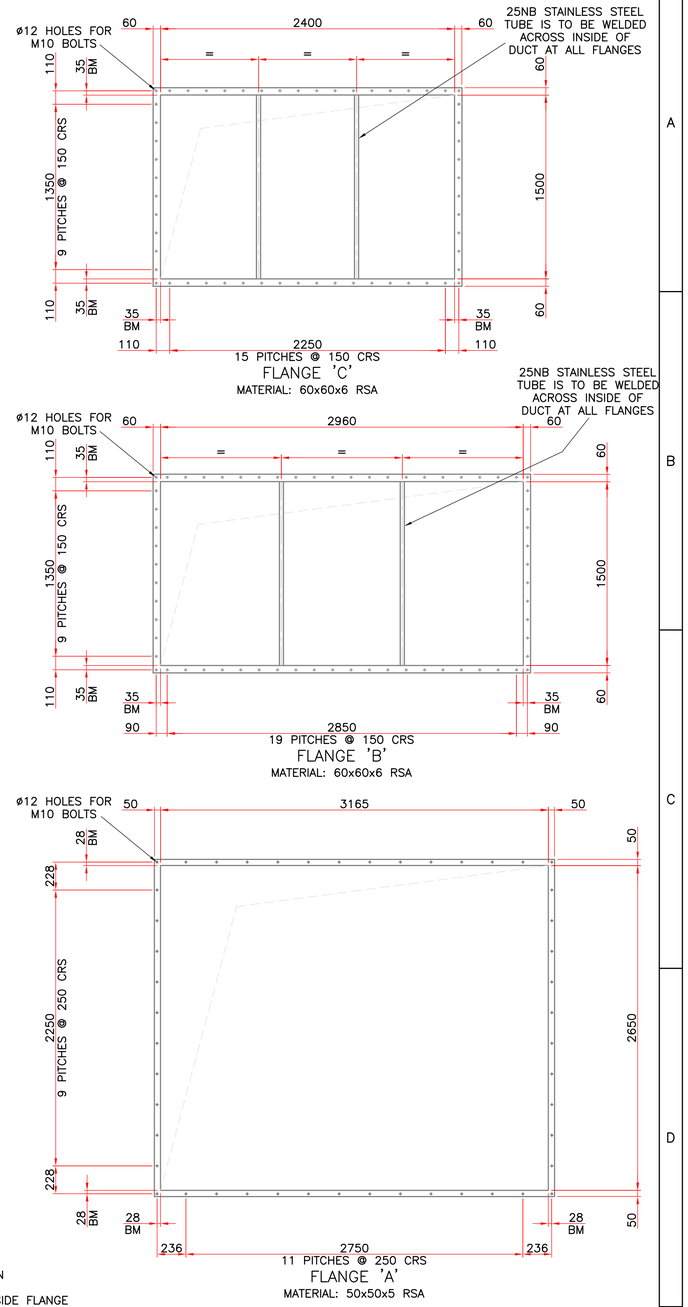

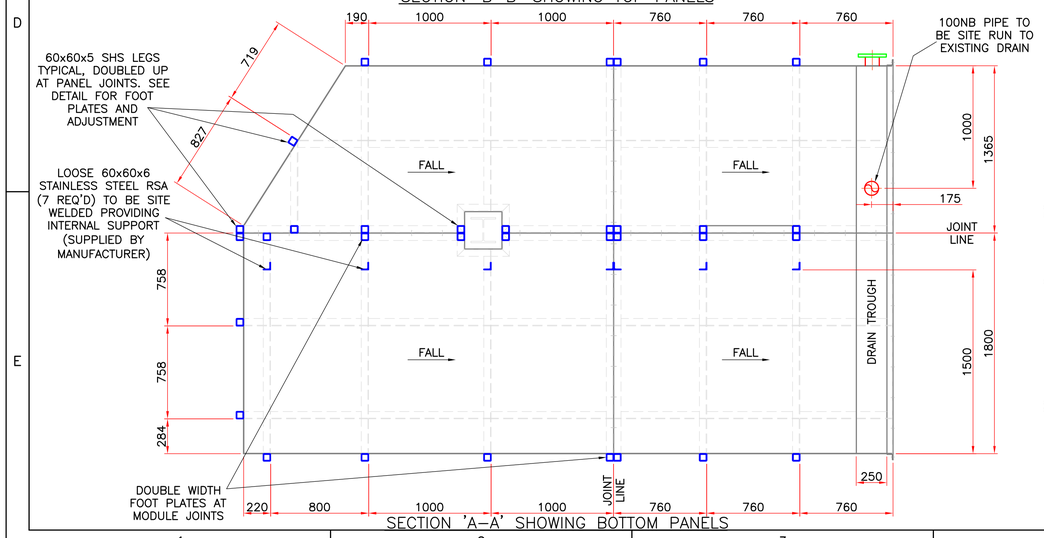

SECTION 'A–A' SHOWING BOTTOM PANELS

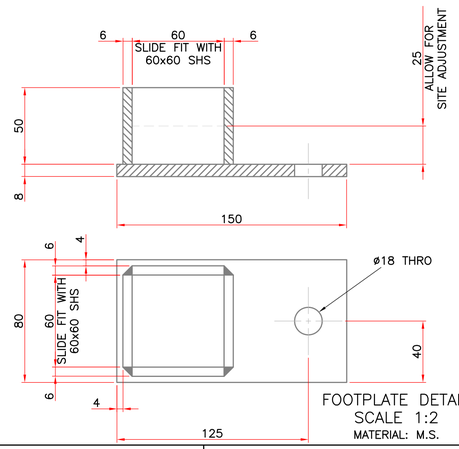

FOOTPLATE DETAIL
SCALE 1:2
MATERIAL: M.S.

GENERAL NOTES

1 ASSEMBLY REQUIRED AS DRAWN

ALL FLANGE DIMENSIONS ARE INSIDE FLANGE OUTSIDE DUCT

ALL UNSPECIFIED FLANGES AND STIFFENERS ARE TO BE FABRICATED FROM 60x60x6 M.S. RSA AND PAINTED SILVER

ASSEMBLY TO BE FABRICATED IN BOLT UP SECTIONS AS SHOWN ON THE ISOMETRIC VIEW

MATERIAL: 2mm 304L STAINLESS STEEL

FLANGES AND SUPPORTS FROM MILD STEEL – PAINTED SILVER

BASES ARE TO BE SEAL WELDED AFTER INSTALLATION

SIDE AND TOP SECTIONS ARE TO BE BOLTED AND SEALED ON INSTALLATION

ALL SECTIONS ARE TO BE SEAL WELDED INTERNALLY AND STITCH WELDED EXTERNALLY TO ANGLES

ALL FASTENERS ARE TO BE STAINLESS STEEL AND SUPPLIED BY MANUFACTURER

ITEM	QTY	DESCRIPTION	MATERIAL	MASS

Engineering Solutions Limited
Technology Centre, Wolverhampton Science Park, Wolverhampton, WV10 9RU
Tel:- 0845 226 8531 Fax:- 0845 226 8532 email: info@ddc-uk.com

DDC Engineering Solutions Limited, WOLVERHAMPTON ENGLAND, considers this drawing and the subject matter hereof to be proprietary and confidential and such shall not be reproduced, copied or used except to the extent authorized by DDC in writing. All copyright, patent and design rights are reserved.

Scale. 1:25 – –

Drawn By: DDC
Date:
Appr'd By:
Date:

Title. BASE SECTION EXHAUST BOX FOR TOPCOAT BOOTH HONDA – SWINDON

Job No.

Drg No. 45060–002

A1